Getting Started Guide

IAR KickStart Kit™ for Toshiba TMPM475

This getting started guide briefly describes how to get started using IAR Embedded Workbench® with the on-board CMSIS-DAP, to run an example application on the target system TMPM475-SK.

For more detailed information, see the IAR Embedded Workbench® IDE user guide, which can be reached from the Help menu or the IAR Information Center in the IAR Embedded Workbench IDE.

Features of IAR KickStart Kit for Toshiba TMPM475

TMPM475-SK evaluation board

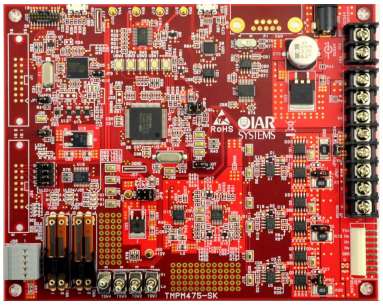

- TMPM475FDFG Cortex-M4 device
- Trace connector 20 pin 0.05”
- On board CMSIS-DAP JTAG Emulator
- USB-micro B connector for USB-Serial converter
- DC brushless motor drive circuit and connector
- CAN connector – unmonted
- Power LED
- 4 User LEDs
- 4 LEDs (For U, V, W and EMG display)
- Reset SW
- 4 User Push SW
- 4 User Toggle SW
- 2 Slide VR
- 3 choices of power supply: USB(DAP_JTAG), External JTAG, Power jack
- Dimensions: 160 x 128 mm
- RoHS/CE compliant

Install IAR Embedded Workbench for ARM

1. Download the software and documentation for the TMPM475-SK evaluation board from **http://www.iar.com/kit_updates**(internet access is needed).
2. Run the software .exe file, it may take a while for the installation files to unpack.
3. Follow the prompt instructions to install the product. We recommend that you use the default directories on your installation.
4. After installation, start IAR Embedded Workbench. Unless you already have an activated valid license, a License Wizard will start.
5. Select **Register with IAR Systems to get an evaluation license.**

Figure 1 - Register to get an evaluation license

6. Select `IAR Embedded Workbench for ARM` and click **Next**.
7. Click **Register**, choose a time limited or code size limited evaluation license. Then complete and submit the registration to get your license number, which will be delivered to you via e-mail within a few minutes.
8. Activate the license received above in the License Wizard window.

   You may register both the time or code size limited evaluation licenses, active and switch in between from the License Manager. For more information, read the Licensing Guide, under USER GUIDES in IAR Information Center for ARM (Figure 2).

Set up the hardware

1. Check the jumpers JP2 and JP5 is closed to enable on-board CMSIS-DAP.
2. Connect your computer and USB_ICE connector(USB1) on the board using USB-micro cable(packing with the kit).
   The DAP-COM and DAP-RUN LED will be lit then turned off when Windows completes searching for a USB driver.
3. Check the jumper JP8 is closed and connect AC adapter to DC power jack(J26)

   Note1:
   Connect CMSIS-DAP to USB root. Using with HUB might cause errors because of Power voltage unstable or shorten of power supply current.

   Note2:

AC adapter is not necessary without using DC motor. Open a jumper JP8 and close a jumper JP7 to supply power from USB_ICE connector.

Run example applications

We assume that you have some working knowledge of the IAR Embedded Workbench IDE. For a quick introduction, see the tutorials under **GETTING STARTED** (Figure 2).

The example described here is `Blinking LED` which uses the Timer 0 to toggle the LEDs on board.

1 Choose **Start>All Programs>IAR Systems>IAR Embedded Workbench for ARM x.xx >IAR Embedded Workbench** to start IAR Embedded Workbench.

2 Click `EXAMPLE PROJECTS`.

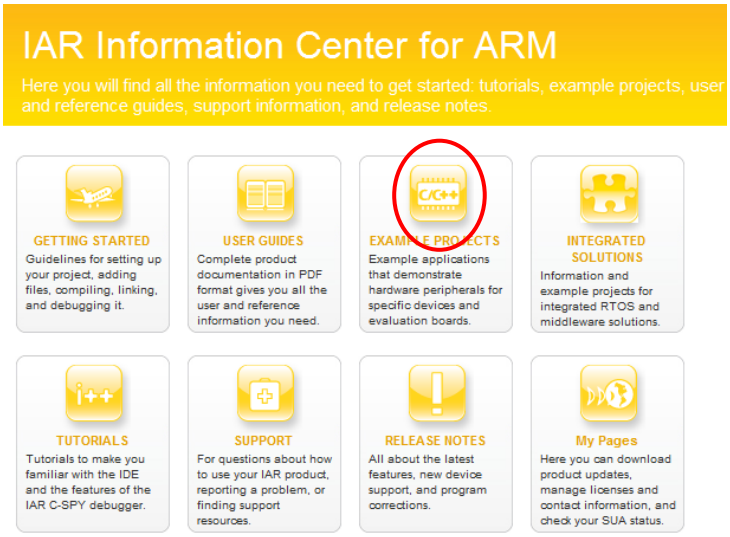

Figure 2- IAR Information Center for ARM

3 Select and click to download the example projects for `Toshiba`, and choose `Download from IAR Systems.`

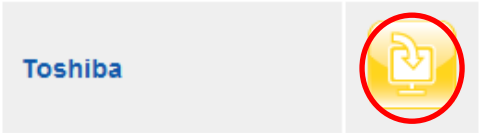

Figure 3 - Download example projects for Toshiba

After downloading, the `Toshiba` will appear under `Installed example projects` on the top.

4 Click to choose `Toshiba -> TMPM475 -> TMPM475-SK.`

5 Click to open an example project: `Blinking LED.`

6 Click **Choose** to select or accept the default destination folder to save a copy of this project for testing, so that the original project will not be updated for any changes you made during testing.

7 Read the `Example description`. Choose `Debug iRAM` build configuration. The project is by default configured to use CMSIS-DAP as a debug probe.

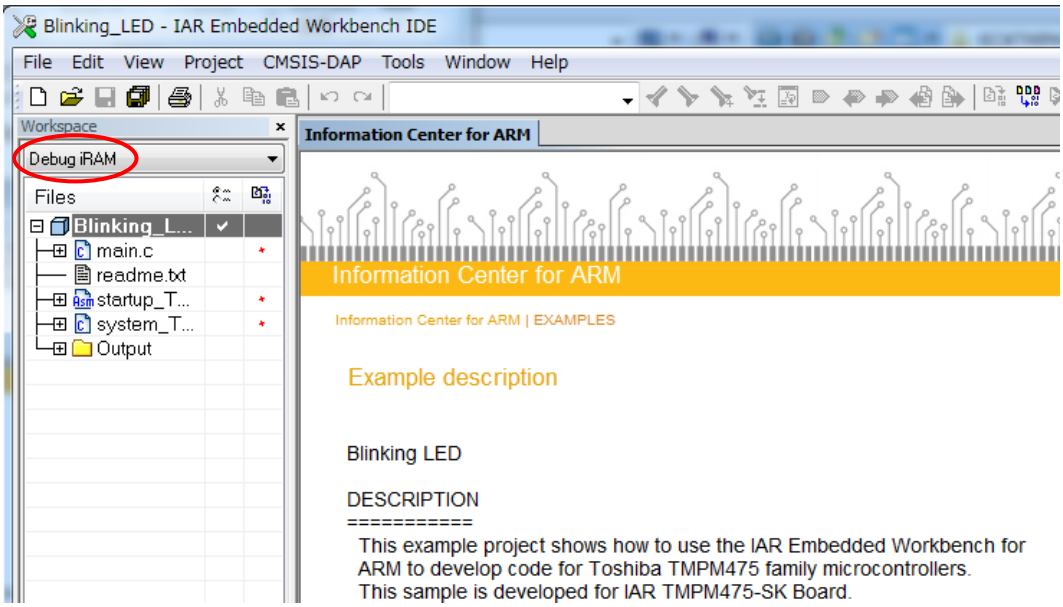

Figure 4 – Build configuration

8 Choose **Project**>**Options** and check if CMSIS DAP is selected at **Debugger** > **Setup** > **Driver** option.

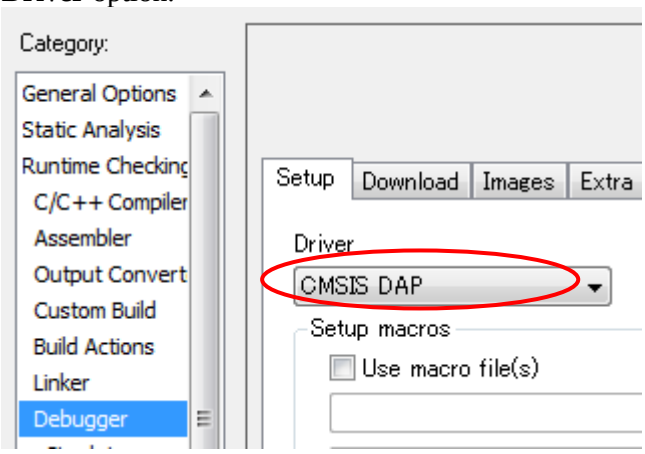

Figure 5- Debugger Driver select

9 Choose **Project>Make** or click the button on the toolbar. The project should be compiled and linked without errors.

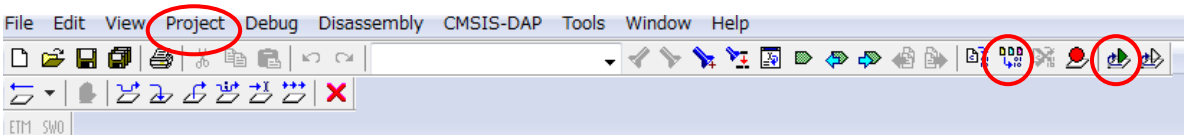

Figure 6 – IAR Embedded Workbench IDE - Toolbar

10 Click the button to download your program to the evaluation board. The file `main.c` is now open in the Editor window and the program is stopped at the start.

11 Click the button to start the application. The LEDs start blinking on the evaluation board.

12 To stop C-SPY, click the button.

13 To exit C-SPY, click the button.

Board overview

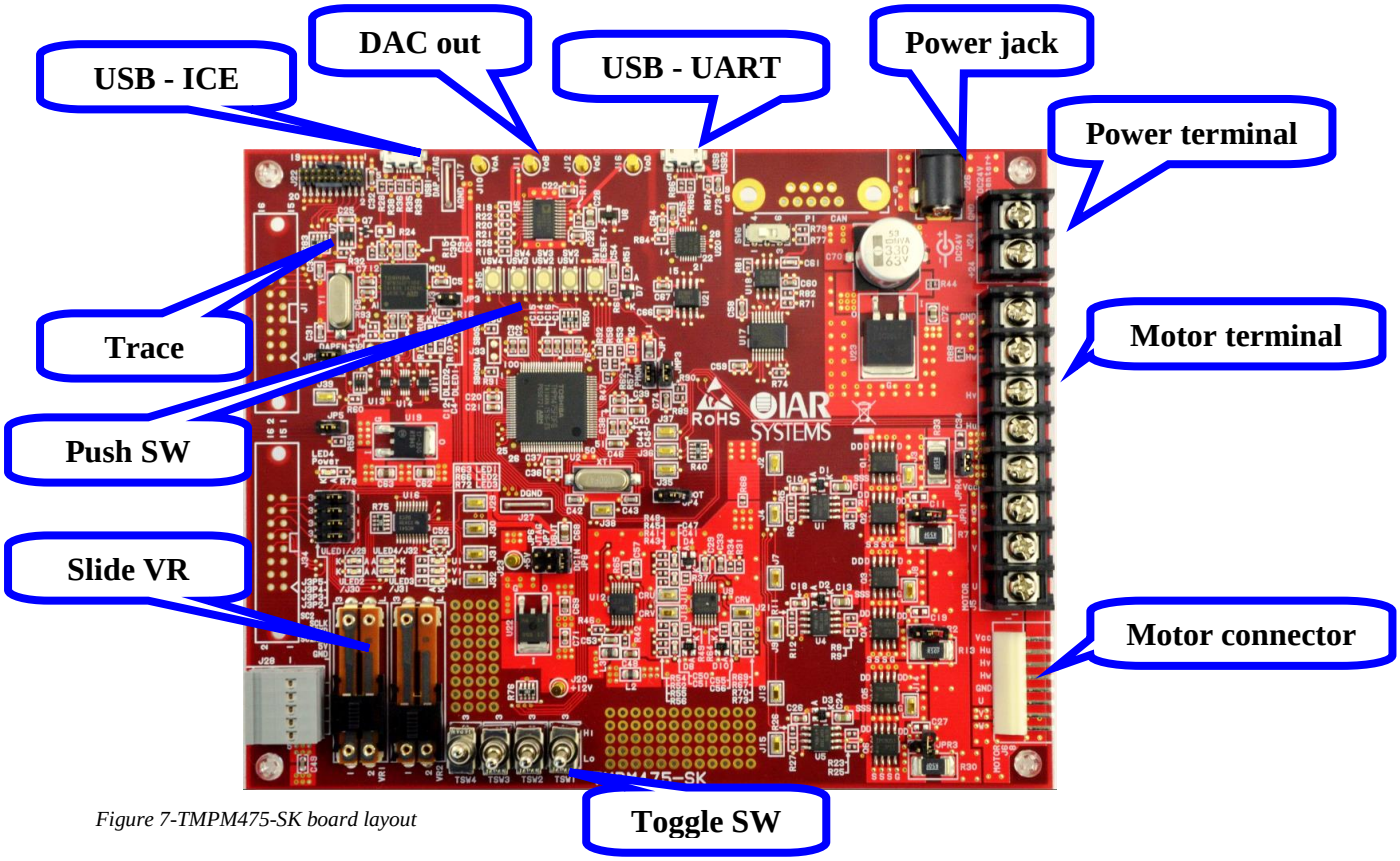

Figure 7-TMPM475-SK board layout

Connector descriptions

Connector	PCB	Description
J5	MOTOR	Motor terminal (Note 1)
J6	MOTOR	Motor connector (Note 1)
J10	VOA	DAC output channel A
J11	VOB	DAC output channel B
J12	VOC	DAC output channel C
J13	VOD	DAC output channel D
J22	TRACE	External JTAG ICE connector
J24	+24	Power supply terminal (Note 2)
J26	DC24V	Power supply jack (Note 2)
USB1	DAP_JTAG	USB connector for On-board CMSIS-DAP
USB2	USB	USB connector for USB – Serial Converter

Table 1 - Connector description

Note 1: Do not connect two motors to J5 and J6 in parallel.

Note 2: Do not use Power terminal (J24) when Power jack (J26) is in use.

Jumper descriptions

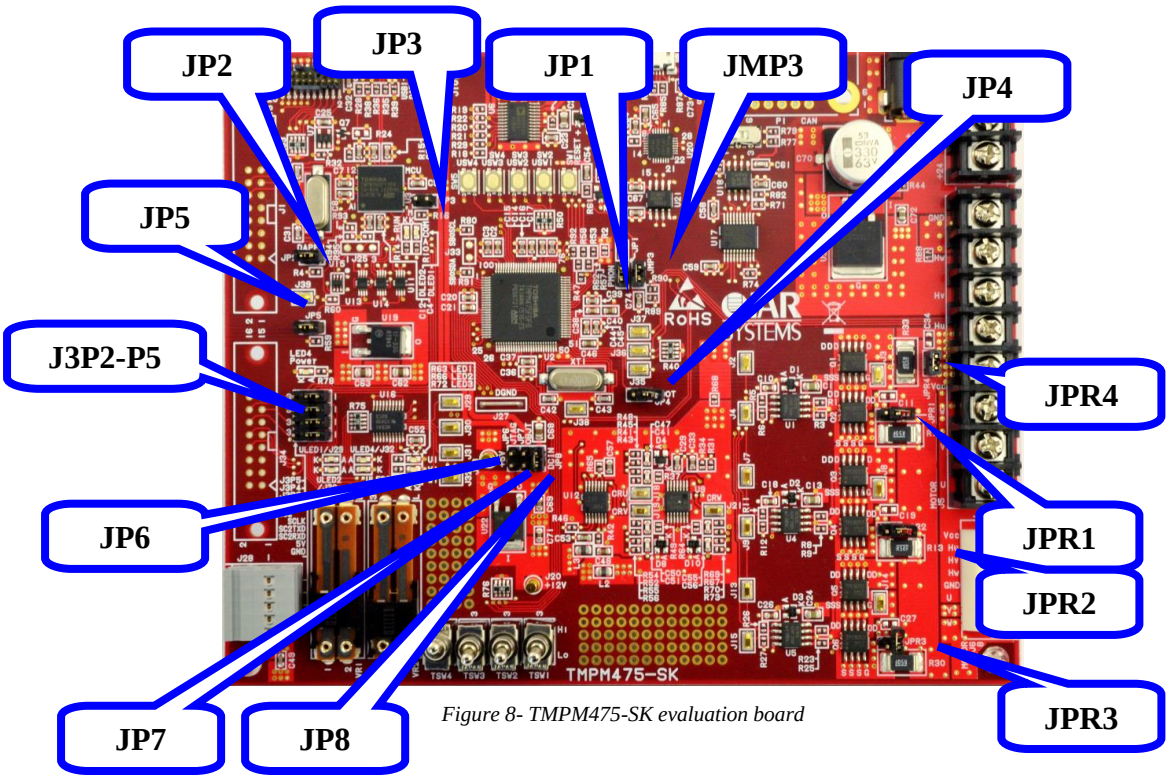

Figure 8- TMPM475-SK evaluation board

Jumper	PCB	Description
JPR1	SHUNT	Position Detection 3-shunt (opened)* / 1 shunt (closed)
JPR2	SHUNT	Position Detection 3-shunt (opened)* / 1 shunt (closed)
JPR3	SHUNT	Position Detection 3-shunt (opened)* / 1 shunt (closed)
JPR4	SHUNT	Position Detection 1-shunt (opened) / 3 shunt (closed) *
JP1	PMON	TMPM475 Power supply No (opened) / Yes (closed)*
JP2	DAPEN	CMSIS-DAP Disable (opened) / Enable (closed)*
JP3	NM	CMSIS-DAP Boot pin always opened*
JP4	BOOT	TMPM475 Boot pin always opened*
JP5	NM	3.3 /5/5 level shift External ICE (opened) / CMSIS-DAP (closed)*
JP6	JTAG	Power supply from External ICE Disable (opened) */ Enable (closed) Close one of JP6-JP8
JP7	OBJT	Power supply from External ICE Disable (opened)* / Enable (closed) Close one of JP6-JP8
JP8	DCIN	Power supply from External ICE Disable (opened) / Enable (closed)* Close one of JP6-JP8
J3P2	EMG	EMG signal onboard inverter (1-2) * / external inverter (2-3)
J3P3	AINB3	U signal onboard inverter (1-2) * / external inverter (2-3)
J3P4	AINB4	V signal onboard inverter (1-2) * / external inverter (2-3)
J3P5	AINB5	W signal onboard inverter (1-2) * / external inverter (2-3)

Table 2 - Jumper description

Note: * means factory default setting

Switch description

Switch	Description
SW1	Reset SW
SW2	Output to PH0
SW3	Output to PH1
SW4	Output to PH2
SW5	Output to PH3
TSW1	Output to PE4
TSW2	Output to PE5
TSW3	Output to PE6
TSW4	Output to PE7

Table 3: Switch settings

Latest updates

For the latest software and documentation updates, please visit

1 IAR Systems – Software and documentation

http://www.iar.com/kit_updates

Troubleshooting
If you are unable to find the cause of a problem, try resetting the evaluation board by using the reset button on the board. Then restart the C-SPY Debugger in the IAR Embedded Workbench IDE. You can also try disconnecting and reconnecting the power to the evaluation board, pressing the reset button and then restarting C-SPY.

Disclaimer
Information given in this document is intended as a help for the user. IAR Systems shall not be held liable for any losses or problems arising from using the information given in this document. Neither whole nor any part of the information in this document may be adapted or reproduced.

IAR KickStart Kit content	Trademarks etc.
• Welcome letter • TMPM475-SK evaluation board • USB-micro cable, • DC brushless motor (TG611B-R2883.24V) incl. cable	IAR Systems, IAR Embedded Workbench, IAR Connect, C-SPY, C-RUN, C-STAT, visualSTATE, IAR KickStart Kit, IAR Experiment!, I-jet, I-jet Trace, I-scope, IAR Academy, IAR and the IAR Systems logotype are trademarks or registered trademarks owned by IAR Systems AB. All other trademarks or registered trademarks mentioned in this document are the properties of their respective owners. © Copyright 2016 IAR Systems AB Part number: GS-TMPM475-1 The first edition: Feb 2016